FIRST ANGLE PROJECTION

ALL DIMENSIONS ARE IN mm

DRG. NO. 2 445 44 66 051

THE INFORMATION ON THIS DOCUMENT IS THE PROPERTY OF BHARAT HEAVY ELECTRICALS LIMITED.
IT MUST NOT BE USED DIRECTLY OR INDIRECTLY IN ANY WAY DETRIMENTAL TO THE INTEREST OF THE COMPANY.

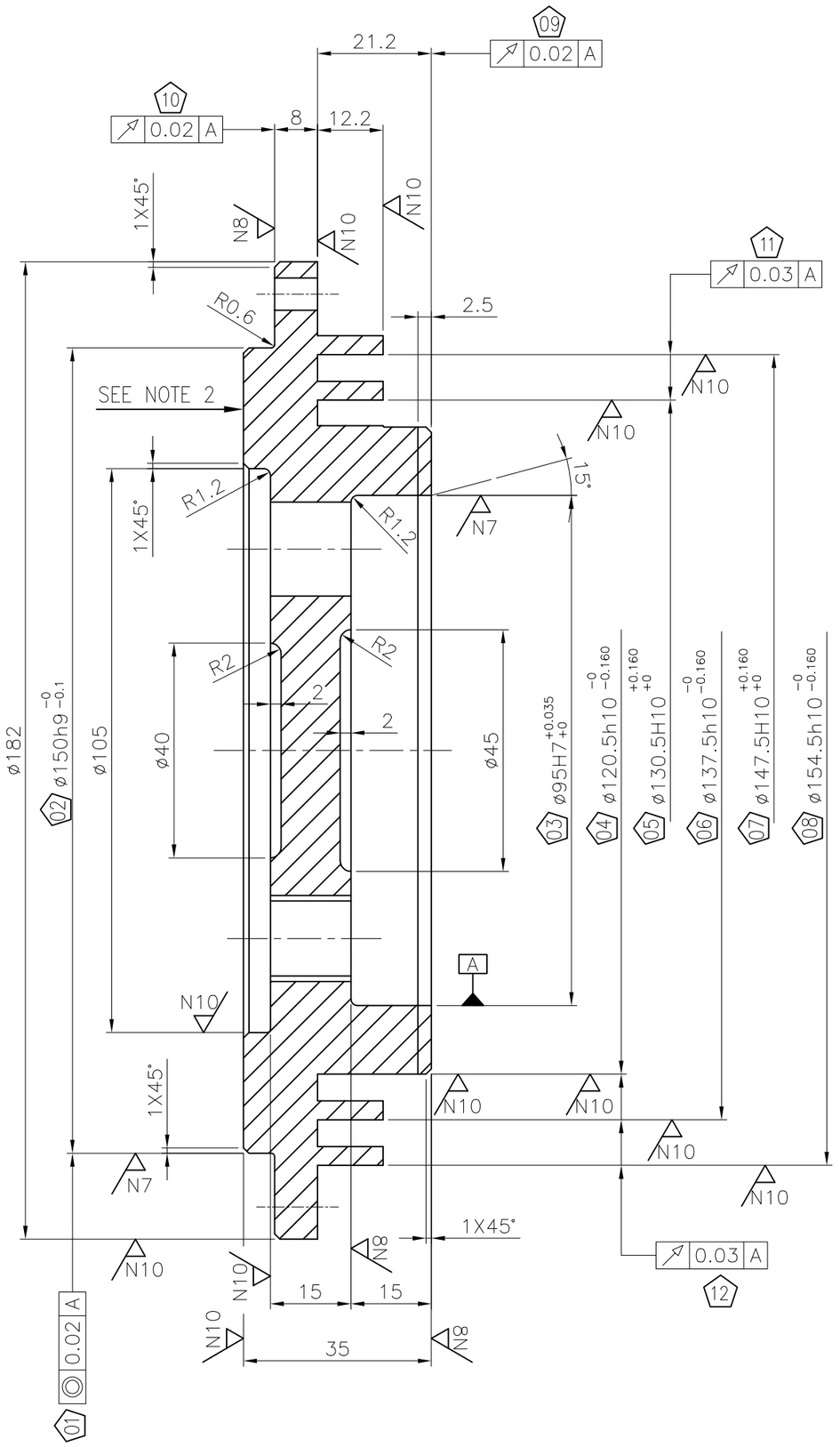

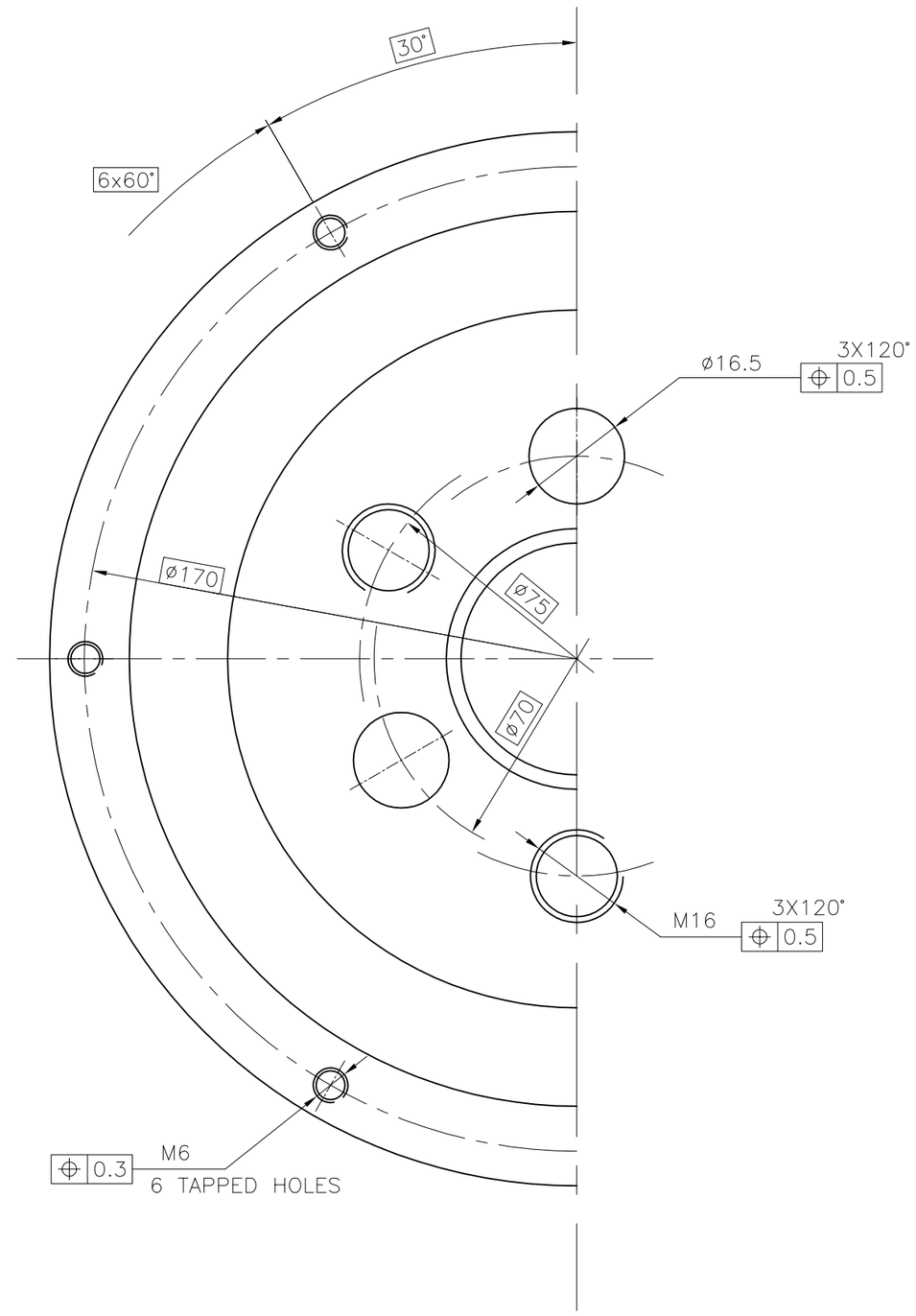

TOOL LIST

IT.NO.	TOOL NO.	DESCRIPTION
001	1578568	PIN GAUGE 95 +0.035/0
001	1578569	CALIPER GAUGE 120.5 −0.16/0
001	1578570	PIN GAUGE 130.5 +0.16/0
001	1578571	CALIPER GAUGE 137.5 −0.16/0
001	1578572	PIN GAUGE 147.5 +0.16/0
001	1578573	CALIPER GAUGE 154.5 −0.16/0
001	1578574	DRILL JIG FOR 6xM6 PCD 170.3 xø16.5 PCD 70 & 3xM16 PCD 75
001	1578575	CALIPER GAUGE 150 −0.1/0

NOTES:−

1. REMOVE ALL SHARP EDGES
2. COMPONENT SHALL BE ETCHED (BY PENCIL ETCHING M/C) AT SHOWN LOCATION , LEGIBLY AND INDELIBLY IN CAPITAL LETTERS WITH FOLLOWING DETAILS:−
   a. MANUFACTURER'S INITIALS OR TRADEMARKS.
   b. MANUFACTURER'S UNIQUE SL. NO., BHEL P.O. NO., BATCH NO./ HEAT NO., DATE OF MANUFACTURING IN MM−YY FORMAT.
3. MATERIAL SPHEROIDALE GRAPHITE CAST IRON(SGCI) TO DIN 1693 PART−1, GR−GGG/40 OR GR−400/18 OF IS:1865−1991 (LATEST VERSION)
4. ALL 12 NOS. "⬠" MARKED DIMENSIONS ARE CRITICAL TO QUALITY (CTQ) & SL. NO. OF CTQ DIMENSIONS ARE INSCRIBED IN ⬠ e.g.⑫.
5. MACHINING ALLOWANCE ON EACH TOOL POINT TO BE 5−7 MM IN CASE CASTING IS SUPPLIED OR 3−5 MM IN CASE ROUGH MACHINED CASTING IS SUPPLIED.

QTY VAR 00	REMARKS	VAR. NO.	ITEM NO.	DESCRIPTION	STD	DRAWING NO.	IT.NO. / VAR.	MATL. CODE / MATL. SPCN.	UNIT	UNIT WT. / QTY.	GS	ZONE
	RAW WT. 10.91 KG.		001	CLAMP PLATE (NDE)				TM−11491	KG.	2.98		

GENERAL TOLERANCE FOR LINEAR AND ANGULAR MEASUREMENTS FOR MACHINING ACCORDING TO 1S0 2768						SURFACE ROUGHNESS VALUE TO IS:3073	GRADE NUMBER	N1	N2	N3	N4	N5	N6	N7	N8	N9	N10	N11	N12
RATED MEASUREMENTS RANGE	>0.5 TO 3.0	>3 TO 6	>6 TO 30	>30 TO 120	>120 TO 400		Ra μ m	0.025	0.05	0.1	0.2	0.4	0.8	1.6	3.2	6.3	12.5	25	50
DEVIATION GRADE	±0.1	±0.1	±0.2	±0.3	±0.5		SYMBOL		√			√			√		√		~

ADDITIONAL INFORMATION
2TWD.097.040, (ALT.02)

STATUS OF DRAWING

DISTRIBUTION OF PRINTS
TME−1, TXM−3, TNX−1

TYPE OF PRODUCT
OR
NAME OF CUSTOMER/PROJECT

TRACTION MOTOR 6FXA − 7059

BHARAT HEAVY ELECTRICALS LTD. BHOPAL

	NAME	SIGN	DATE	NO. OF VAR.
DRN.	S.D.BHAGAT	−sd−	10/09/10	
CHD.	DK	−sd−	10/09/10	
APPD.	AS	−sd−	10/09/10	

REV.	DATE			ZONE	
05	17.05.17	ALTERED SDB CHECKED AS APPROVED AS			TOOL LIST ADDED. (TCM−350)
04	29.06.13	ALTERED CHECKED APPROVED			CRITICAL TO QUALITY DIMENSIONS ARE "⬠" MARKED & NUMBERED. LOCATION ON IDENTIFICATION SHOWN. NOTE−2 AMMENDED AND NOTE 4&5 ADDED.
03	14.12.11	ALTERED CHECKED APPROVED			WT. 2.98 KG. WAS 2.25 KG. WT. 10.91 KG. WAS NOT ON.
02	05.05.11	ALTERED CHECKED APPROVED			IN BOM TM−11491 WAS ON 4TMS.069.068 .
01	30.12.10	ALTERED CHECKED APPROVED			DRG. UPDATE & DIGITIZED.

DEPT.	UNTOL. DIMS. GR.	SCALE	WEIGHT (K.G.)	REF. TO ASSY. DRG.	ITEM NO.	NO. OF ITEM
TME		NTS	2.25	0 445 10 66 051	011	001
CODE 405						

TITLE
CLAMP PLATE (NDE) MACHINED

DRAWING NO. 2 445 44 66 051 REV. 05

SHT. NO. 01 NO. OF SHT. 01

REF. DRG. NO.

SIGN. & DATE

INVENTORY NO.

A2

SIZE A2